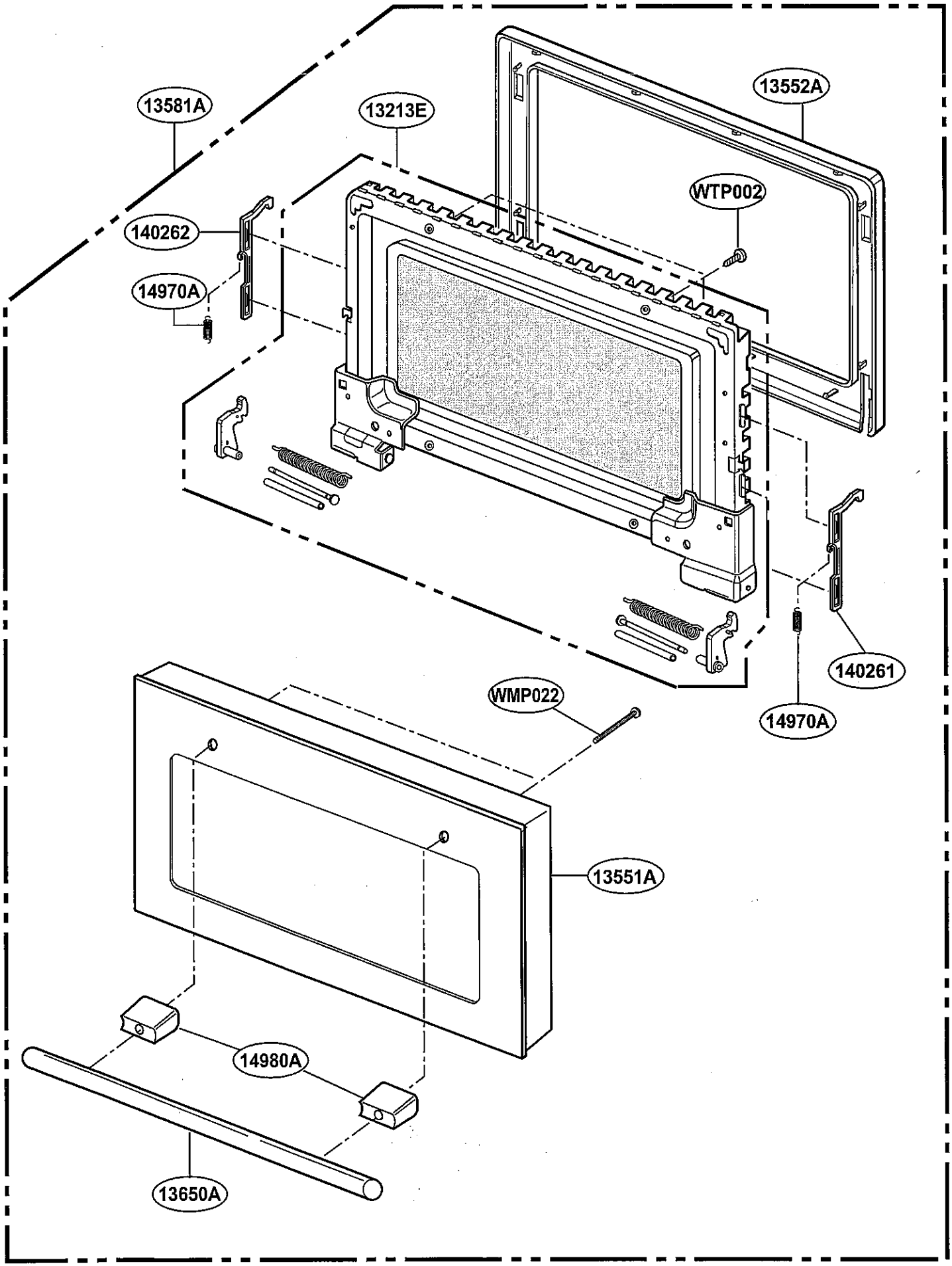
13581A
13213E
13552A
WTP002
140262
14970A
140261
14970A
WMP022
13551A
14980A
13650A

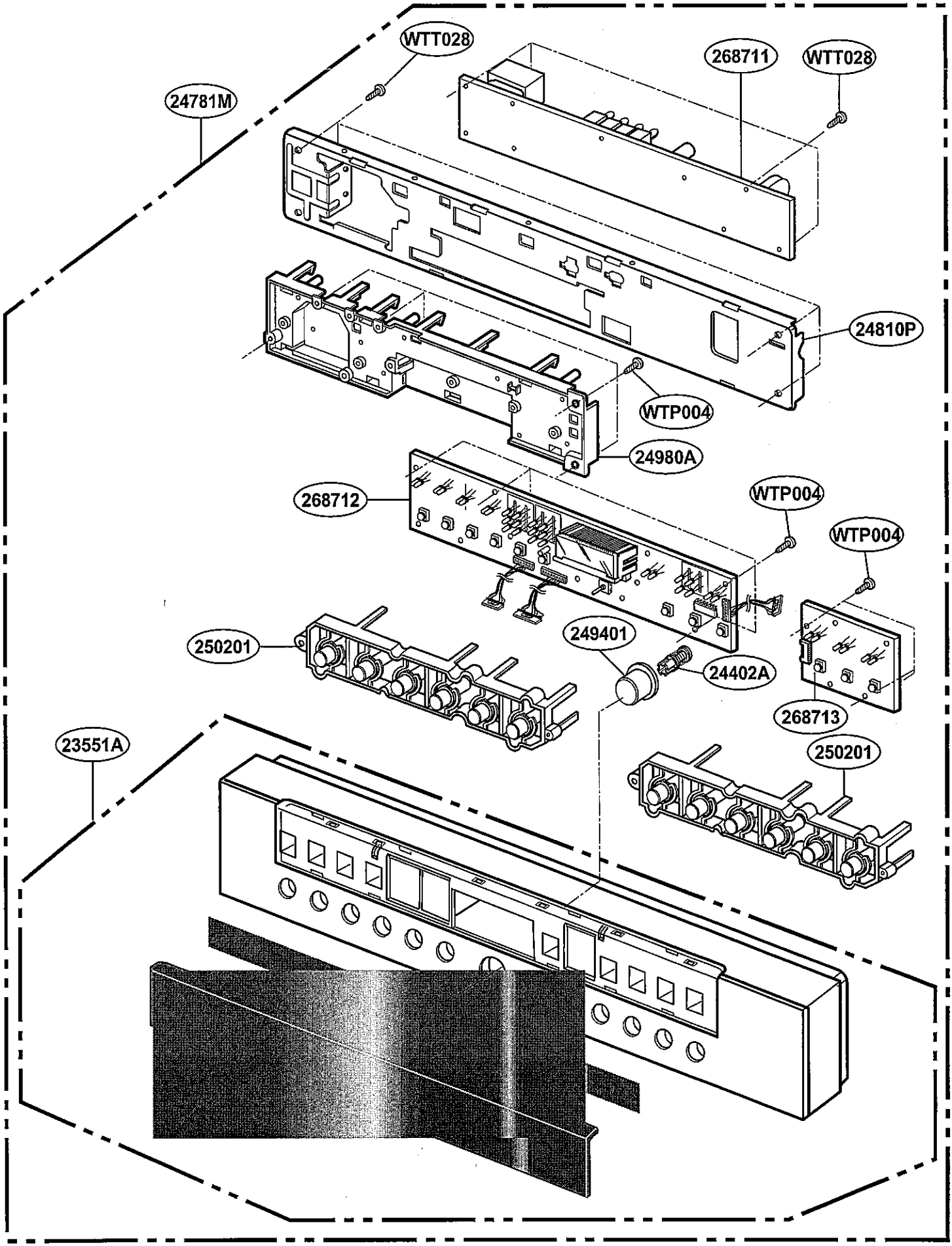
WTT028
268711
WTT028
24781M
24810P
WTP004
24980A
268712
WTP004
WTP004
250201
249401
24402A
268713
23551A
250201

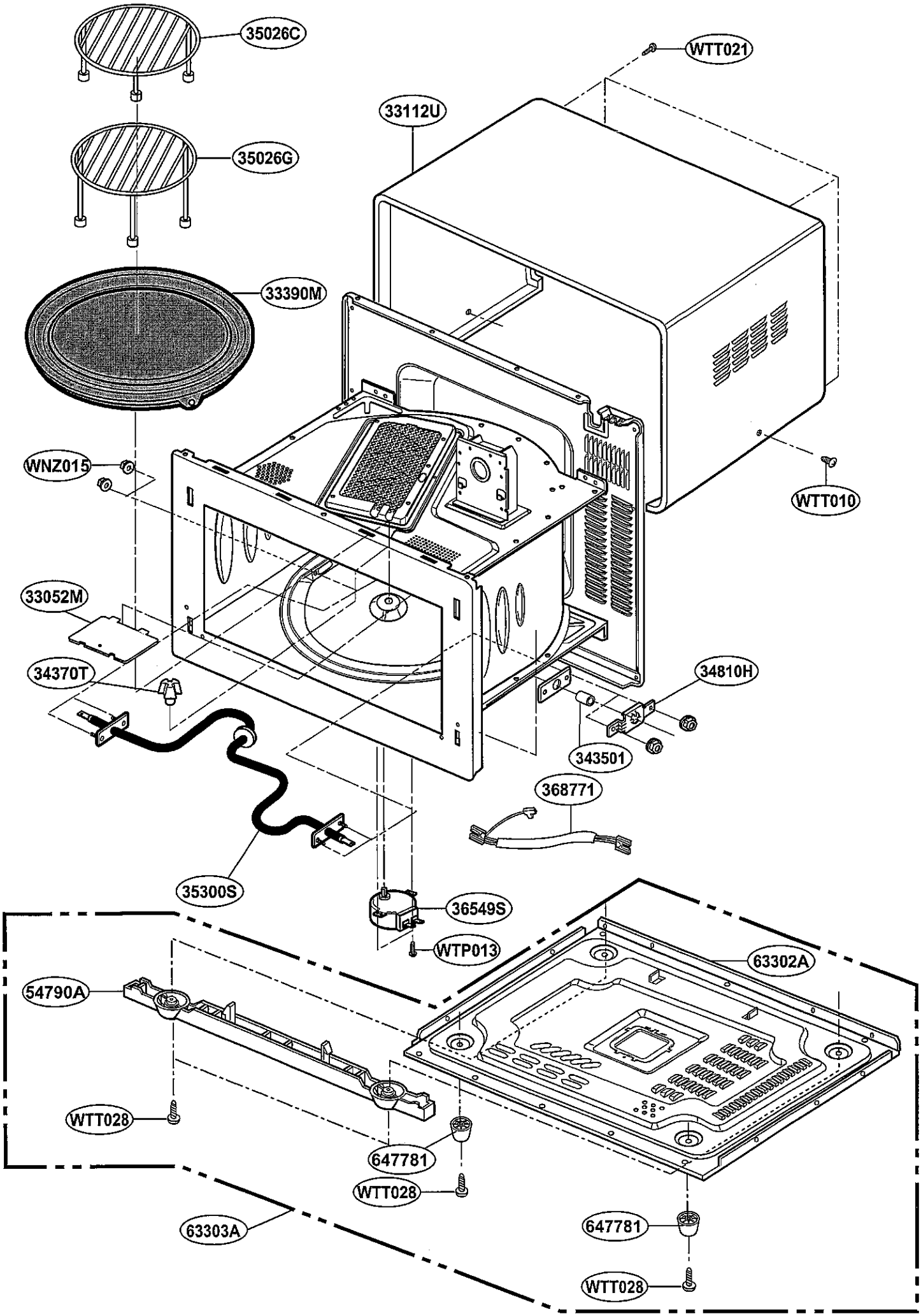
35026C
WTT021
33112U
35026G
33390M
WNZ015
WTT010
33052M
34370T
34810H
343501
368771
35300S
36549S
WTP013
63302A
54790A
WTT028
647781
WTT028
63303A
647781
WTT028

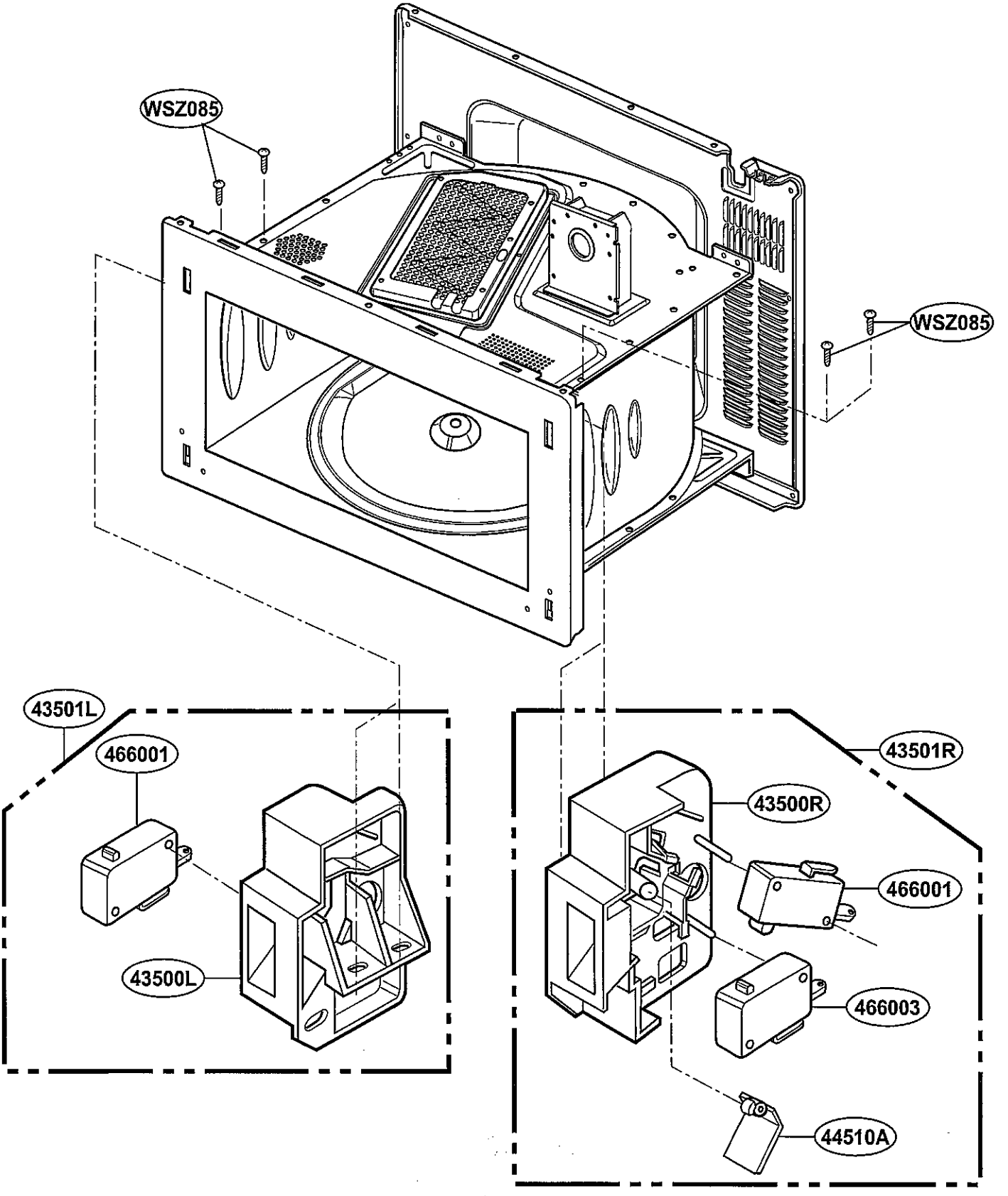
WSZ085
WSZ085
43501L
466001
43500L
43501R
43500R
466001
466003
44510A

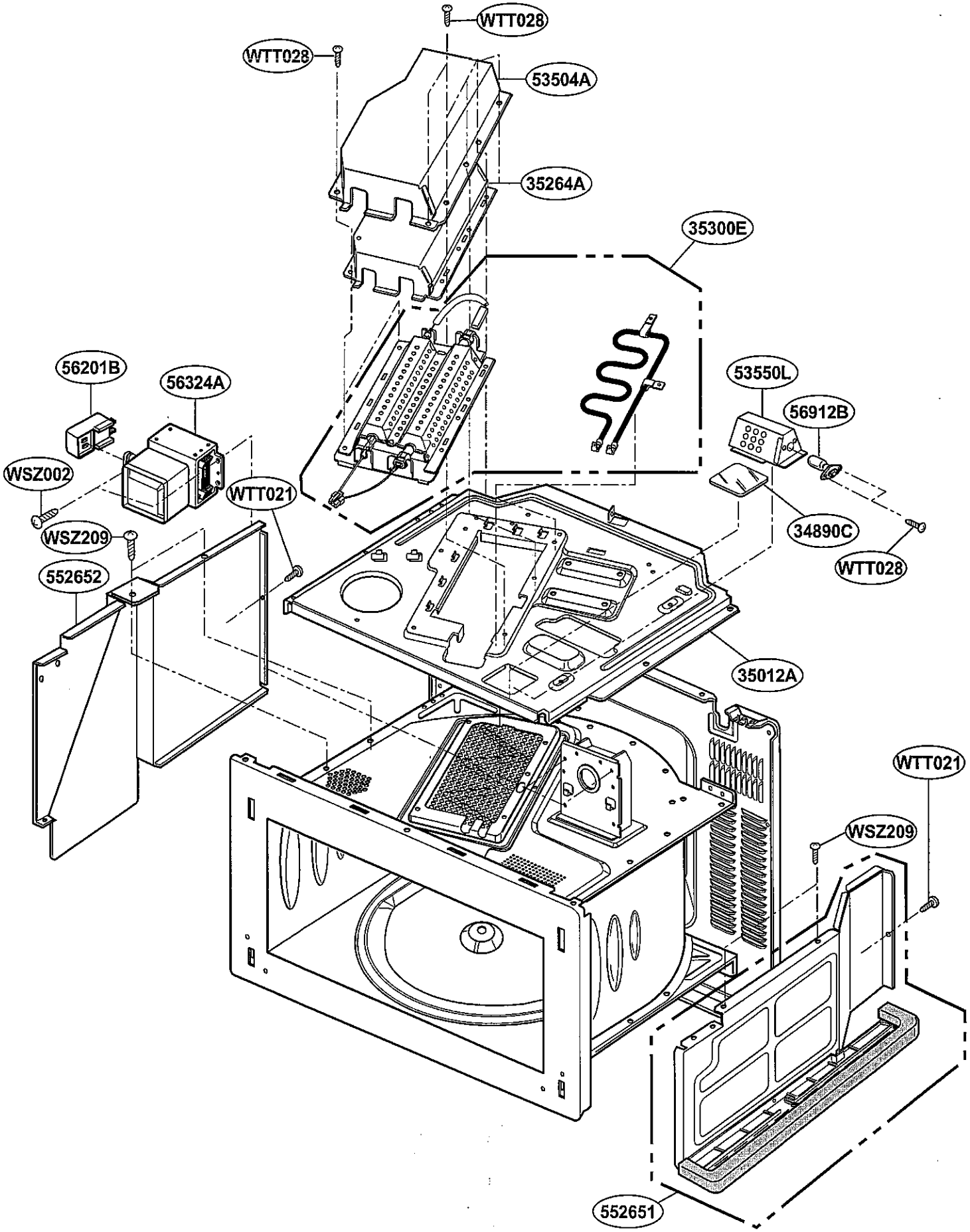
WTT028
WTT028
53504A
35264A
35300E
56201B
56324A
53550L
56912B
WSZ002
WTT021
34890C
WSZ209
WTT028
552652
35012A
WTT021
WSZ209
552651

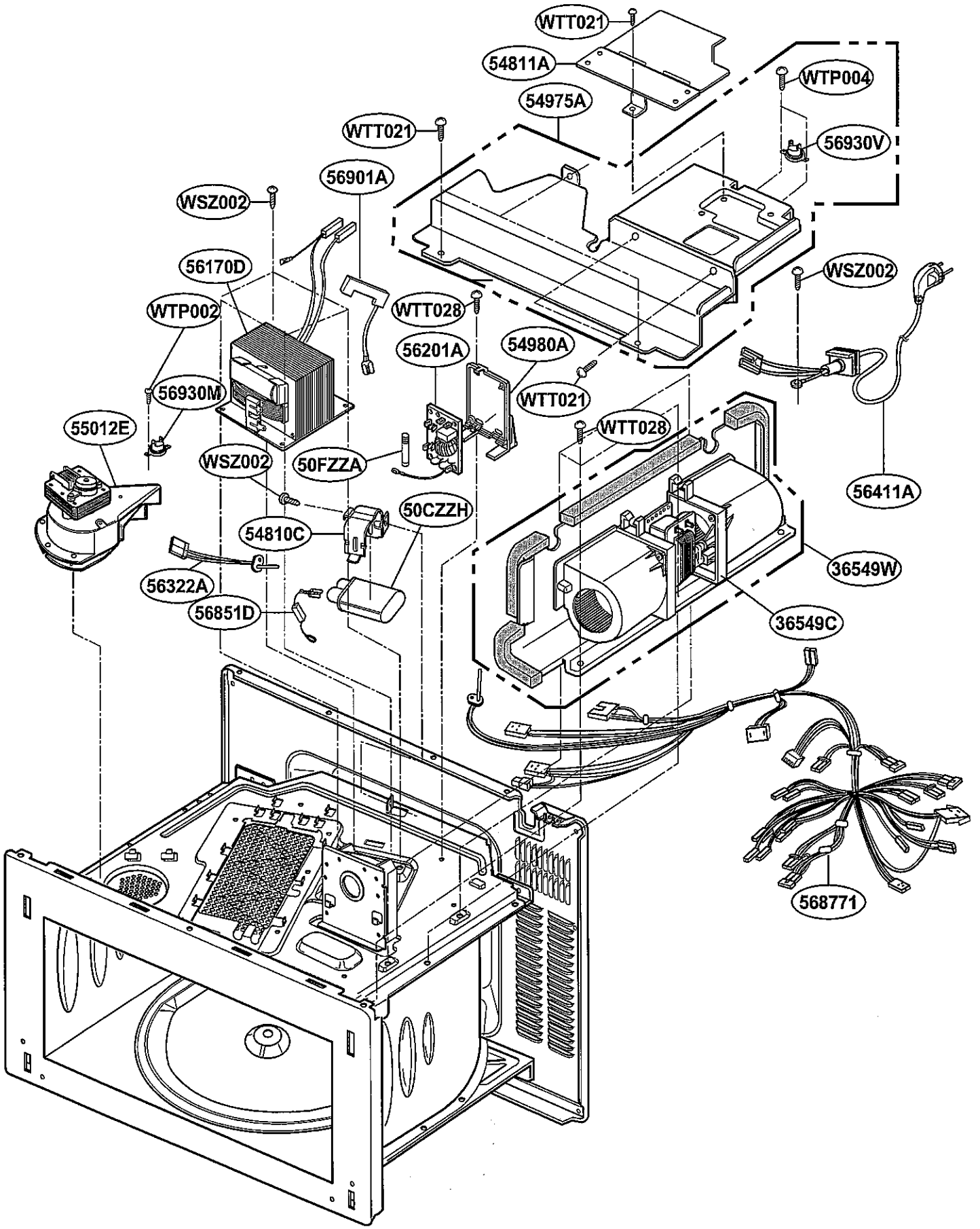
WTT021
54811A
WTP004
54975A
WTT021
56930V
56901A
WSZ002
56170D
WSZ002
WTP002
WTT028
56201A
54980A
56930M
WTT021
55012E
WTT028
WSZ002
50FZZA
56411A
50CZZH
54810C
36549W
56322A
56851D
36549C
568771